Higher

GCSE

Combined Science B Twenty First Century Science

J260/08: Combined science (Higher Tier)

General Certificate of Secondary Education

Mark Scheme for June 2022

OCR (Oxford Cambridge and RSA) is a leading UK awarding body, providing a wide range of qualifications to meet the needs of candidates of all ages and abilities. OCR qualifications include AS/A Levels, Diplomas, GCSEs, Cambridge Nationals, Cambridge Technicals, Functional Skills, Key Skills, Entry Level qualifications, NVQs and vocational qualifications in areas such as IT, business, languages, teaching/training, administration and secretarial skills.

It is also responsible for developing new specifications to meet national requirements and the needs of students and teachers. OCR is a not-for-profit organisation; any surplus made is invested back into the establishment to help towards the development of qualifications and support, which keep pace with the changing needs of today's society.

This mark scheme is published as an aid to teachers and students, to indicate the requirements of the examination. It shows the basis on which marks were awarded by examiners. It does not indicate the details of the discussions which took place at an examiners' meeting before marking commenced.

All examiners are instructed that alternative correct answers and unexpected approaches in candidates' scripts must be given marks that fairly reflect the relevant knowledge and skills demonstrated.

Mark schemes should be read in conjunction with the published question papers and the report on the examination.

MARKING INSTRUCTIONS

PREPARATION FOR MARKING

RM ASSESSOR

1. Make sure that you have accessed and completed the relevant training packages for on-screen marking: *RM Assessor Online Training*; *OCR Essential Guide to Marking*.
2. Make sure that you have read and understood the mark scheme and the question paper for this unit. These are available in RM Assessor.
3. Log-in to RM Assessor and mark the **required number** of practice responses ("scripts") and the **required number** of standardisation responses.

MARKING

1. Mark strictly to the mark scheme.
2. Marks awarded must relate directly to the marking criteria.
3. The schedule of dates is very important. It is essential that you meet the RM Assessor 50% and 100% (traditional 50% Batch 1 and 100% Batch 2) deadlines. If you experience problems, you must contact your Team Leader (Supervisor) without delay.
4. If you are in any doubt about applying the mark scheme, consult your Team Leader by telephone, email or via the RM Assessor messaging system.

5. **Crossed Out Responses**
Where a candidate has crossed out a response and provided a clear alternative then the crossed out response is not marked. Where no alternative response has been provided, examiners may give candidates the benefit of the doubt and mark the crossed out response where legible.

Rubric Error Responses – Optional Questions
Where candidates have a choice of question across a whole paper or a whole section and have provided more answers than required, then all responses are marked and the highest mark allowable within the rubric is given. Enter a mark for each question answered into RM assessor, which will select the highest mark from those awarded. *(The underlying assumption is that the candidate has penalised themselves by attempting more questions than necessary in the time allowed.)*

Multiple Choice Question Responses
When a multiple choice question has only a single, correct response and a candidate provides two responses (even if one of these responses is correct), then no mark should be awarded (as it is not possible to determine which was the first response selected by the candidate).
When a question requires candidates to select more than one option/multiple options, then local marking arrangements need to ensure consistency of approach.

Contradictory Responses
When a candidate provides contradictory responses, then no mark should be awarded, even if one of the answers is correct.

Short Answer Questions (requiring only a list by way of a response, usually worth only **one mark per response**)
Where candidates are required to provide a set number of short answer responses then only the set number of responses should be marked. The response space should be marked from left to right on each line and then line by line until the required number of responses have been considered. The remaining responses should not then be marked. Examiners will have to apply judgement as to whether a 'second response' on a line is a development of the 'first response', rather than a separate, discrete response. *(The underlying assumption is that the candidate is attempting to hedge their bets and therefore getting undue benefit rather than engaging with the question and giving the most relevant/correct responses.)*

Short Answer Questions (requiring a more developed response, worth **two or more marks**)
If the candidates are required to provide a description of, say, three items or factors and four items or factors are provided, then mark on similar basis – that is downwards (as it is unlikely in this situation that a candidate will provide more than one response in each section of the response space.)

Longer Answer Questions (requiring a developed response)
Where candidates have provided two (or more) responses to a medium or high tariff question which only required a single (developed) response and not crossed out the first response, then only the first response should be marked. Examiners will need to apply professional judgement as to whether the second (or a subsequent) response is a 'new start' or simply a poorly expressed continuation of the first response.

6. Always check the pages (and additional objects if present) at the end of the response in case any answers have been continued there. If the candidate has continued an answer there then add a tick to confirm that the work has been seen.

7. Award No Response (NR) if:
   - there is nothing written in the answer space.

   Award Zero '0' if:
   - anything is written in the answer space and is not worthy of credit (this includes text and symbols).

   Team Leaders must confirm the correct use of the NR button with their markers before live marking commences and should check this when reviewing scripts.

8. The RM Assessor **comments box** is used by your Team Leader to explain the marking of the practice responses. Please refer to these comments when checking your practice responses. **Do not use the comments box for any other reason.**

   If you have any questions or comments for your Team Leader, use the phone, the RM Assessor messaging system, or email.

9. Assistant Examiners will send a brief report on the performance of candidates to their Team Leader (Supervisor) via email by the end of the marking period. The report should contain notes on particular strengths displayed as well as common errors or weaknesses. Constructive criticism of the question paper/mark scheme is also appreciated.

10. For answers marked by levels of response:

Read through the whole answer from start to finish, using the Level descriptors to help you decide whether it is a strong or weak answer. The indicative scientific content in the Guidance column indicates the expected parameters for candidates' answers, but be prepared to recognise and credit unexpected approaches where they show relevance. Using a 'best-fit' approach based on the skills and science content evidenced within the answer, first decide which set of level descriptors, Level 1, Level 2 or Level 3, best describes the overall quality of the answer.

Once the level is located, award the higher or lower mark:

The higher mark should be awarded where the level descriptor has been evidenced and all aspects of the communication statement (in italics) have been met.

The lower mark should be awarded where the level descriptor has been evidenced but aspects of the communication statement (in italics) are missing.

In summary:

The skills and science content determines the level.

The communication statement determines the mark within a level.

Level of response questions on this paper are **X** and **X**

11. Annotations available in RM Assessor

Annotation	Meaning
✓	Correct response
✗	Incorrect response
^	Omission mark
BOD	Benefit of doubt given
CON	Contradiction
RE	Rounding error
SF	Error in number of significant figures
ECF	Error carried forward
L1	Level 1
L2	Level 2
L3	Level 3
NBOD	Benefit of doubt not given
SEEN	Noted but no credit given
I	Ignore

12. Abbreviations, annotations and conventions used in the detailed Mark Scheme (to include abbreviations and subject-specific conventions).

Annotation	Meaning
/	alternative and acceptable answers for the same marking point
✓	Separates marking points
DO NOT ALLOW	Answers which are not worthy of credit
IGNORE	Statements which are irrelevant
ALLOW	Answers that can be accepted
( )	Words which are not essential to gain credit
__	Underlined words must be present in answer to score a mark
ECF	Error carried forward
AW	Alternative wording
ORA	Or reverse argument

13. **Subject-specific Marking Instructions**

INTRODUCTION

Your first task as an Examiner is to become thoroughly familiar with the material on which the examination depends. This material includes:

- the specification, especially the assessment objectives
- the question paper
- the mark scheme.

You should ensure that you have copies of these materials.

You should ensure also that you are familiar with the administrative procedures related to the marking process. These are set out in the OCR booklet **Instructions for Examiners**. If you are examining for the first time, please read carefully **Appendix 5 Introduction to Script Marking: Notes for New Examiners**.

Please ask for help or guidance whenever you need it. Your first point of contact is your Team Leader.

The breakdown of Assessment Objectives for GCSE (9-1) in Combined Science B:

	Assessment Objective
AO1	**Demonstrate knowledge and understanding of scientific ideas and scientific techniques and procedures.**
AO1.1	Demonstrate knowledge and understanding of scientific ideas.
AO1.2	Demonstrate knowledge and understanding of scientific techniques and procedures.
AO2	**Apply knowledge and understanding of scientific ideas and scientific enquiry, techniques and procedures.**
AO2.1	Apply knowledge and understanding of scientific ideas.
AO2.2	Apply knowledge and understanding of scientific enquiry, techniques and procedures.
AO3	**Analyse information and ideas to interpret and evaluate, make judgements and draw conclusions and develop and improve experimental procedures.**
AO3.1	Analyse information and ideas to interpret and evaluate.
AO3.1a	Analyse information and ideas to interpret.
AO3.1b	Analyse information and ideas to evaluate.
AO3.2	Analyse information and ideas to make judgements and draw conclusions.
AO3.2a	Analyse information and ideas to make judgements.
AO3.2b	Analyse information and ideas to draw conclusions.
AO3.3	Analyse information and ideas to develop and improve experimental procedures.
AO3.3a	Analyse information and ideas to develop experimental procedures.
AO3.3b	Analyse information and ideas to improve experimental procedures.

Question			Answer	Marks	AO element	Guidance
1	(a)		**Any one from:** (wear) goggles / safety glasses ✓ Screen ✓ Lab coat/apron ✓ Gloves ✓	1	1.2	Glasses must be qualified **ALLOW** tweezers or tongs
	(b)	(i)	(B) C E A D ✓✓✓	3	3.1a	C before E = 1 mark E before A = 1 mark A before D = 1 mark
		(ii)	**(No)** (to test for hydrogen, they need to) use a lighted/lit splint/do not blow out the splint ✓ idea that the positive test for hydrogen will give a (squeaky) pop ✓	2	3.3b	**ALLOW** a glowing splint is the test for oxygen **ALLOW** positive test for oxygen given (relights the glowing splints)
	(c)		2[Na] ✓ 2[HC*l*] ✓ 2[NaC*l*] ✓	3	2.1	

Question			Answer	Marks	AO element	Guidance
2	(a)	(i)	Greenfly ☐ Hedgehog ✓ Lettuce ☐ Owl ☐ Rabbit ☐ Spider ✓ ✓	1	3.2b	Both required for the mark
		(ii)	Five ✓	1	3.1a	
		(iii)	**Either:** Snails would increase ✓ Because less competition for food ✓ **Or:** Snails would decrease ✓ Because hedgehogs would eat more snails ✓	2	3.2b	**ALLOW** more lettuce / food (for them to eat) **IGNORE** blackbirds **ALLOW** stays the same with a suitable explanation of both ideas of increase and decrease
	(b)		**FIRST CHECK THE ANSWER ON ANSWER LINE** **If answer = 0.375 (kg) award 2 marks** 37.5 / 10 = 3.75 ✓ 3.75 / 10 = 0.375 ✓	2	2.2	**ALLOW** 3.75 by other methods for 1 mark

Question			Answer	Marks	AO element	Guidance
3	(a)	(i)	**FIRST CHECK THE ANSWER ON ANSWER LINE** **If answer = 7.9 (%) award 3 marks** 6 cells undergoing mitosis✓ 6 / 76 = 0.078947✓ x 100 = 7.9% ✓	3	**3.1a** **2.2 x 2**	**ALLOW** 7.8 for 2 marks **ALLOW** any correct rounding **ALLOW** ECF for incorrect number of cells identified
		(ii)	(tips are where) growth is taking place ✓	1	2.1	
		(iii)	Differentiation → Cells in the bean plant that can form any type of cell Interphase → The stage in the cell cycle before the bean cells begin mitosis. Meristem Cells → A group of bean cells that have the same function. Tissue → The process of newly formed bean cells becoming root hair cells. ✓✓✓	3	1.1	4 correct lines = 3 marks 3 or 2 correct lines = 2 marks 1 correct line = 1 mark
	(b)		twice ✓ gametes ✓ 23 ✓	3	1.1	

Question			Answer	Marks	AO element	Guidance
4		*	Please refer to the marking instructions on page 4 of this mark scheme for guidance on how to mark this question. **Level 3 (5–6 marks)** Calculations of both momenta **AND** Explains how the difference in momentum of the two lorries affects the time taken to stop the lorry and relates this to the stopping distance *There is a well-developed line of reasoning which is clear and logically structured. The information presented is relevant and substantiated.* **Level 2 (3–4 marks)** Calculations of momenta **AND** Explains the effect of momenta on the stopping distance of the two lorries *There is a line of reasoning presented with some structure. The information presented is relevant and supported by some evidence.* **Level 1 (1–2 marks)** Evidence of some calculations e.g. Fully laden mass **OR** Explains factors affecting stopping distance *There is a line of reasoning presented with some structure. The information presented is relevant and supported by some evidence.* **0 marks** *No response or no response worthy of credit.*	6	**2 x 1.1** **2 x 2.2** **2 x 3.2a**	**AO1.1 recall of information about stopping distances/change in momentum** • Stopping distances include thinking distance and braking distance • Thinking distance/reaction time is the same in a loaded or unloaded lorry • Change in momentum is force x time (from the data sheet)– the greater the change in momentum, for the same braking force, the longer the time to stop. • A greater stopping time from the same velocity will cause a greater stopping distance. • Named factors affecting stopping distance e.g. road conditions, weather **AO2.2 application of equation** Total laden mass of the lorry = 44 000 kg Momentum of unladen lorry = 362 500 kg m/s Momentum of fully laden lorry = 1 100 000 kg m/s Difference in momentum = 737 500 kg m/s **AO 3.2a judgements about stopping distances** • Momentum in the fully laden lorry is much greater (approximately 3 times greater) than the unladen lorry. • More time will be needed to stop the loaded lorry, meaning greater distance • The same (braking) force will take a longer time to stop the loaded lorry.

Question			Answer	Marks	AO element	Guidance
5	(a)	(i)	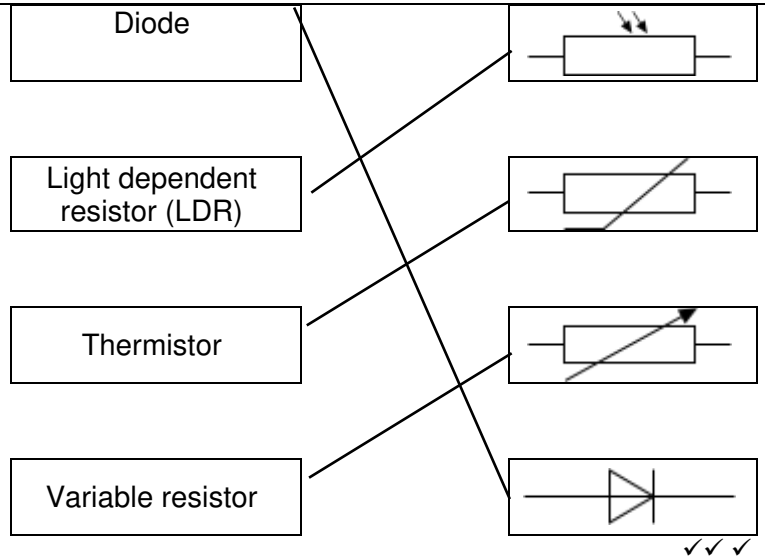	3	1.1	4 correct lines = 3 marks 3 or 2 correct lines= 2 marks 1 correct line = 1 mark
		(ii)	Idea that one of the cells needs to be turned around in the battery / cells are facing the same way✓ Voltmeter needs to be connected in parallel / across (the thermistor/resistor) ✓	2	3.3b	**ALLOW** correct drawings on the circuit diagram for either marking point **ALLOW** a description of the voltmeter correctly connected to the thermistor/resistor
		(iii)	All points plotted correctly within ½ small square ✓ ✓ Line of best fit ✓	3	2.1	**ALLOW** 4 correct plotted points for 1 mark **IGNORE** extrapolations beyond the points **ALLOW** lines of best fit drawn through the origin as 0,0 would be a correct point.
	(b)		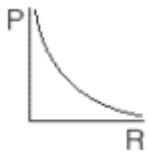 ✓	1	2.1	

Question			Answer	Marks	AO element	Guidance
6	(a)	(i)	Diamond ☐ Graphite ☐ Lead bromide ☑ Potassium chloride ☑ Silicon dioxide ☐ ✓✓	2	3.2a	
		(ii)	**Any two from:** fill the test tubes with sodium chloride solution ✓ Place the test tubes over the electrode ✓ test tubes (open end) must be under the solution surface ✓ use shorter electrodes / top of electrodes under surface of the solution / add more sodium chloride solution to the beaker ✓	2	3.3a	**DO NOT ALLOW** use a.c. power supply
		(iii)	(anode) chlorine ✓ (cathode) hydrogen ✓	2	2.1	**ALLOW** oxygen at the anode **ALLOW** Cl_2 and H_2 in that order If no other mark is awarded then allow chlorine/oxygen and hydrogen at the opposite electrodes for 1 mark
	(b)		$2e^-$ ✓ 2Na ✓	2	2.1	**DO NOT ALLOW** Na^+ **ALLOW** correct formulae of e and Na for 1 mark

Question			Answer	Marks	AO element	Guidance
7	(a)	(i)	**FIRST CHECK THE ANSWER ON ANSWER LINE** **If answer = 671 (women) award 2 marks** 55.4% used in calculation ✓ 0.554 x 1212 = 671(.448) ✓	2	 **3.1b** **2.2**	**ALLOW** 672 **ECF** with correct process from 54.5 or 45.5 to give 660(.54) or 551(.46) respectively
		(ii)	Iceland ✓	1	**3.2b**	
		(iii)	**Any three from:** In this study no women in the Iceland sample have BRCA1 ✓ Only Finland is close to a 1:1 ratio ✓ idea of a difference in percentages (about 10%) in most countries ✓ Italy has a 60:40 ratio / % which is very different / not equal ✓ idea that there are 3 countries have a higher BRCA1 than BRCA2 ✓ This study only represents 5 countries / small number of countries ✓ The sample size of each country is unknown/small ✓	3	**3.1b**	**ALLOW** the calculation of mean % of those with BRCA1 (44%) compared to BRCA2 (56%)

	(b)		**Any two from:** make better lifestyle choices ✓ idea of informing relatives so they can make their own informed decisions ✓ idea to inform family planning ✓ can make informed decisions about treatment e.g. preventative surgery based e.g. have mastectomy ✓ can make informed decisions about treatment e.g. preventative medication ✓	**2**	**2.1**	**ALLOW** reduce alcohol, not smoking, not being over weight, eat a healthy diet, exercise regularly and don't take the oral contraceptive combined pill **ALLOW** ideas that you can make informed decisions about breast feeding your child to reduce BRCA allele incidence
	(c)	**(i)**	Beth ✓	**1**	**3.1b**	
		(ii)	Jamal ✓	**1**	**3.1b**	

Question			Answer	Marks	AO element	Guidance
8	(a)	(i)	**FIRST CHECK THE ANSWER ON ANSWER LINE** **If answer = 7850 nm^2 or 7854 nm^2 award 3 marks** radius = 50/2 = 25 ✓ 4 x 3.14 x 25^2 = 7850 **OR** 4 x π x 25^2 =7854 ✓ nm^2 ✓	3	1.2	**ALLOW** calculator value of 7853.98 or correct rounding for. 3 marks **ALLOW** ECF for use of diameter instead of radius in calculation 31 400 **OR** 31416 (if π is used) **ALLOW** 7850 or 7854 in the working for 1 mark if further working leads to an incorrect answer **ALLOW** alternative units if correct conversion is given
		(ii)	Gold is very valuable ☐ Gold has the smallest diameter ☐ Gold is very unreactive ☑ Gold only contains one element ☐ ✓	1	3.2a	
	(b)		Large(er) SA:V ✓ (increased rate of reaction because) there are more collisions per second / more frequent collisions / more particles are exposed/on the surface (to react with) ✓	2	2.2	**IGNORE** comments about diameter / size **ALLOW** ideas of there being less inaccessible /wasted silver oxide in the catalyst
	(c)		**Any one from:** Nanoparticles are very small ✓ Idea that people wear sunscreen ✓ **AND** **Any three from:** Idea that sunscreen washes off into the ecosystem ✓ Nanoparticles may end up in tissue (of organisms) ✓ Nanoparticles may enter the food chain/food web ✓ Idea of bioaccumulation ✓ TiO_2 nanoparticles might damage marine organisms ✓	4	2.1 3.2b x 3	**ALLOW** named examples of organisms

Question			Answer	Marks	AO element	Guidance
9	(a)		$^{234}_{92}U \longrightarrow {}^{230}_{90}Th + \alpha$ 230 ✓ 90 ✓ α ✓	3	2.1	**ALLOW** He or see below $^{4}_{2}He$ **DO NOT ALLOW** incorrect nucleon numbers for He
	(b)	(i)	**FIRST CHECK THE ANSWER ON ANSWER LINE** **If answer = 11460 / 1.15 x 10^4 / (years) award 3 marks** 1/4 is equal to 1/2 x 1/2 - so 2 half lives ✓ 2 x 5.73 x 10^3 ✓ 1.15 x 10^4 / 11460 (years) ✓	3	2.2	
		(ii)	**Any one from:** Radioactive decay happens randomly ✓ Background radiation may cause errors ✓ Only 2 half-lives have been used ✓	1	3.2b	

Need to get in touch?

If you ever have any questions about OCR qualifications or services (including administration, logistics and teaching) please feel free to get in touch with our customer support centre.

Call us on

01223 553998

Alternatively, you can email us on

support@ocr.org.uk

For more information visit

- **ocr.org.uk/qualifications/resource-finder**
- **ocr.org.uk**
- **Twitter/ocrexams**
- **/ocrexams**
- **/company/ocr**
- **/ocrexams**

CAMBRIDGE
UNIVERSITY PRESS & ASSESSMENT

OCR is part of Cambridge University Press & Assessment, a department of the University of Cambridge.

OCR operates academic and vocational qualifications regulated by Ofqual, Qualifications Wales and CCEA as listed in their qualifications registers including A Levels, GCSEs, Cambridge Technicals and Cambridge Nationals.

OCR provides resources to help you deliver our qualifications. These resources do not represent any particular teaching method we expect you to use. We update our resources regularly and aim to make sure content is accurate but please check the OCR website so that you have the most up-to-date version. OCR cannot be held responsible for any errors or omissions in these resources.

Though we make every effort to check our resources, there may be contradictions between published support and the specification, so it is important that you always use information in the latest specification. We indicate any specification changes within the document itself, change the version number and provide a summary of the changes. If you do notice a discrepancy between the specification and a resource, please contact us.

Whether you already offer OCR qualifications, are new to OCR or are thinking about switching, you can request more information using our Expression of Interest form.

Please get in touch if you want to discuss the accessibility of resources we offer to support you in delivering our qualifications.