Please check the examination details below before entering your candidate information

Candidate surname	Other names

Pearson Edexcel Level 3 GCE

Centre Number | Candidate Number

Time 1 hour 30 minutes

Paper reference **9FM0/4C**

Further Mathematics

Advanced

PAPER 4C: Further Mechanics 2

You must have:
Mathematical Formulae and Statistical Tables (Green), calculator

Total Marks

Candidates may use any calculator permitted by Pearson regulations. Calculators must not have the facility for symbolic algebra manipulation, differentiation and integration, or have retrievable mathematical formulae stored in them.

Instructions

- Use **black** ink or ball-point pen.
- If pencil is used for diagrams/sketches/graphs it must be dark (HB or B).
- **Fill in the boxes** at the top of this page with your name, centre number and candidate number.
- Answer **all** questions and ensure that your answers to parts of questions are clearly labelled.
- Answer the questions in the spaces provided – *there may be more space than you need.*
- You should show sufficient working to make your methods clear. Answers without working may not gain full credit.
- Unless otherwise indicated, whenever a value of g is required, take $g = 9.8\,\text{m s}^{-2}$ and give your answer to either 2 significant figures or 3 significant figures.

Information

- A booklet 'Mathematical Formulae and Statistical Tables' is provided.
- There are 7 questions in this question paper. The total mark for this paper is 75.
- The marks for **each** question are shown in brackets – *use this as a guide as to how much time to spend on each question.*

Advice

- Read each question carefully before you start to answer it.
- Try to answer every question.
- Check your answers if you have time at the end.
- Good luck with your examination.

Turn over

©2021 Pearson Education Ltd.

Pearson

1.

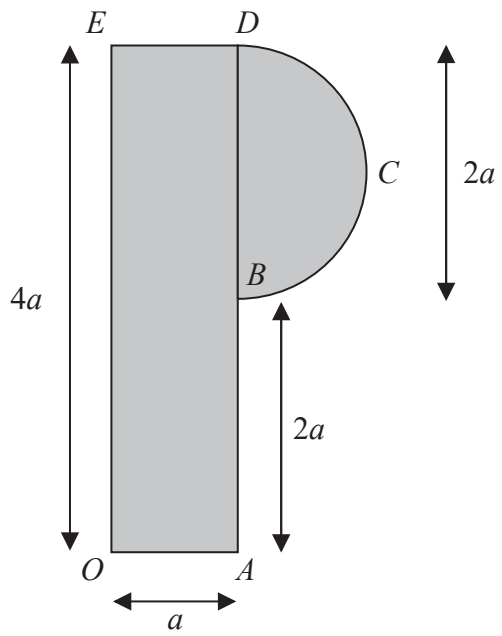

Figure 1

A letter P from a shop sign is modelled as a uniform plane lamina which consists of a rectangular lamina, *OABDE*, joined to a semicircular lamina, *BCD*, along its diameter *BD*.

$OA = ED = a$, $AB = 2a$, $OE = 4a$, and the diameter $BD = 2a$, as shown in Figure 1.

Using the model,

(a) find, in terms of π and a, the distance of the centre of mass of the letter P,

from (i) OE

(ii) OA

(6)

The letter P is freely suspended from O and hangs in equilibrium. The angle between OE and the downward vertical is α.

Using the model,

(b) find the exact value of $\tan \alpha$

(2)

DO NOT WRITE IN THIS AREA
DO NOT WRITE IN THIS AREA
DO NOT WRITE IN THIS AREA

DO NOT WRITE IN THIS AREA
DO NOT WRITE IN THIS AREA
DO NOT WRITE IN THIS AREA

Question 1 continued

Question 1 continued

DO NOT WRITE IN THIS AREA
DO NOT WRITE IN THIS AREA
DO NOT WRITE IN THIS AREA

DO NOT WRITE IN THIS AREA
DO NOT WRITE IN THIS AREA
DO NOT WRITE IN THIS AREA

Question 1 continued

(Total for Question 1 is 8 marks)

2. At time $t = 0$, a small stone P of mass m is released from rest and falls vertically through the air. At time t, the speed of P is v and the resistance to the motion of P from the air is modelled as a force of magnitude kv^2, where k is a constant.

(a) Show that $t = \dfrac{V}{2g}\ln\left(\dfrac{V+v}{V-v}\right)$ where $V^2 = \dfrac{mg}{k}$

(4)

(b) Give an interpretation of the value of V, justifying your answer.

(2)

At time t, P has fallen a distance s.

(c) Show that $s = \dfrac{V^2}{2g}\ln\left(\dfrac{V^2}{V^2 - v^2}\right)$

(4)

DO NOT WRITE IN THIS AREA
DO NOT WRITE IN THIS AREA
DO NOT WRITE IN THIS AREA

DO NOT WRITE IN THIS AREA
DO NOT WRITE IN THIS AREA
DO NOT WRITE IN THIS AREA

Question 2 continued

Question 2 continued

DO NOT WRITE IN THIS AREA
DO NOT WRITE IN THIS AREA
DO NOT WRITE IN THIS AREA

DO NOT WRITE IN THIS AREA
DO NOT WRITE IN THIS AREA
DO NOT WRITE IN THIS AREA

Question 2 continued

(Total for Question 2 is 10 marks)

3.

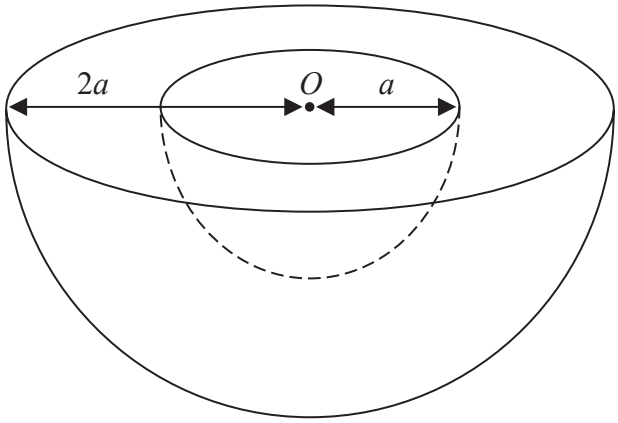

Figure 2

A uniform solid hemisphere H has radius $2a$. A solid hemisphere of radius a is removed from the hemisphere H to form a bowl. The plane faces of the hemispheres coincide and the centres of the two hemispheres coincide at the point O, as shown in Figure 2.

The centre of mass of the bowl is at the point G.

(a) Show that $OG = \dfrac{45a}{56}$

(4)

Figure 3 below shows a cross-section of the bowl which is resting in equilibrium with a point P on its curved surface in contact with a rough plane. The plane is inclined to the horizontal at an angle α and is sufficiently rough to prevent the bowl from slipping. The line OG is horizontal and the points O, G and P lie in a vertical plane which passes through a line of greatest slope of the inclined plane.

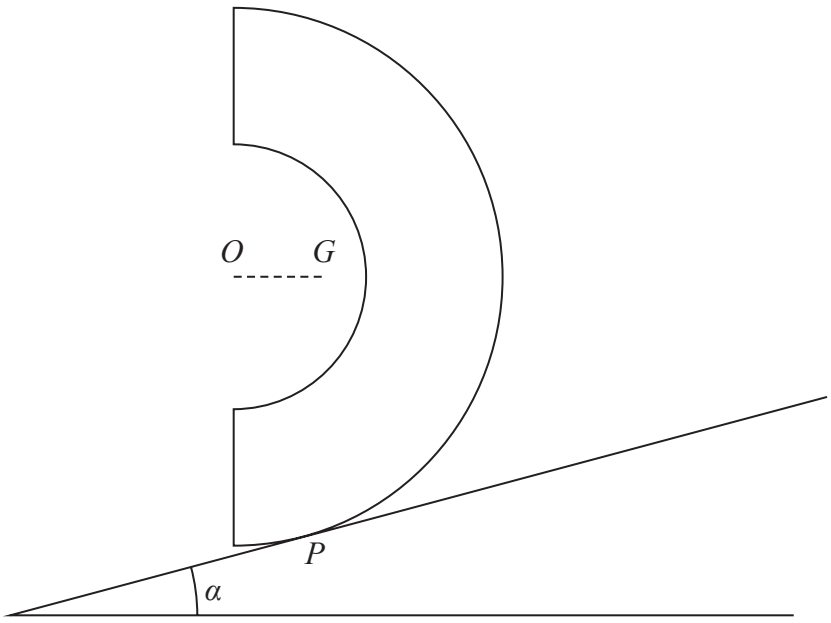

Figure 3

(b) Find the size of α, giving your answer in degrees to 3 significant figures.

(2)

P 6 6 8 0 5 A 0 1 0 3 2

DO NOT WRITE IN THIS AREA DO NOT WRITE IN THIS AREA DO NOT WRITE IN THIS AREA

Question 3 continued

DO NOT WRITE IN THIS AREA
DO NOT WRITE IN THIS AREA
DO NOT WRITE IN THIS AREA

Question 3 continued

DO NOT WRITE IN THIS AREA
DO NOT WRITE IN THIS AREA
DO NOT WRITE IN THIS AREA

Question 3 continued

(Total for Question 3 is 6 marks)

DO NOT WRITE IN THIS AREA
DO NOT WRITE IN THIS AREA
DO NOT WRITE IN THIS AREA

4.

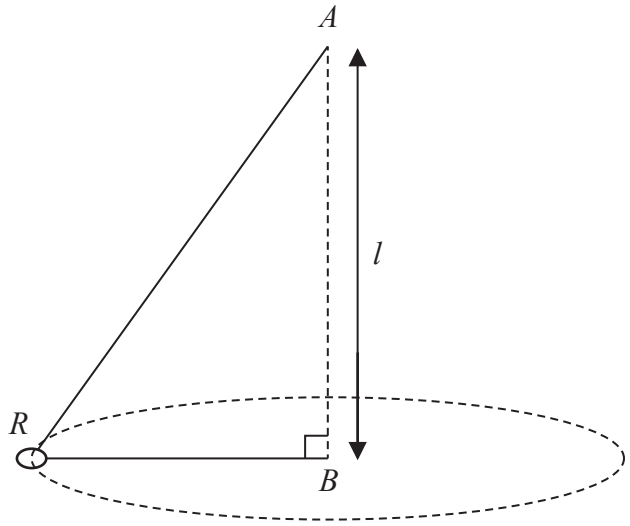

Figure 4

One end of a light inextensible string of length $2l$ is attached to a fixed point A. A small smooth ring R of mass m is threaded on the string and the other end of the string is attached to a fixed point B. The point B is vertically below A, with $AB = l$. The ring is then made to move with constant speed V in a horizontal circle with centre B. The string is taut and BR is horizontal, as shown in Figure 4.

(a) Show that $BR = \dfrac{3l}{4}$

(2)

Given that air resistance is negligible,

(b) find, in terms of m and g, the tension in the string,

(4)

(c) find V in terms of g and l.

(4)

DO NOT WRITE IN THIS AREA
DO NOT WRITE IN THIS AREA
DO NOT WRITE IN THIS AREA

Question 4 continued

DO NOT WRITE IN THIS AREA
DO NOT WRITE IN THIS AREA
DO NOT WRITE IN THIS AREA

Question 4 continued

DO NOT WRITE IN THIS AREA
DO NOT WRITE IN THIS AREA
DO NOT WRITE IN THIS AREA

Question 4 continued

(Total for Question 4 is 10 marks)

DO NOT WRITE IN THIS AREA
DO NOT WRITE IN THIS AREA
DO NOT WRITE IN THIS AREA

5. A light inextensible string of length a has one end attached to a fixed point O. The other end of the string is attached to a small stone of mass m. The stone is held with the string taut and horizontal. The stone is then projected vertically upwards with speed U.

The stone is modelled as a particle and air resistance is modelled as being negligible.

Assuming that the string does not break, use the model to

(a) find the least value of U so that the stone will move in complete vertical circles.

(6)

The string will break if the tension in it is equal to $\frac{11mg}{2}$

Given that $U = 2\sqrt{ag}$, use the model to

(b) find the total angle that the string has turned through, from when the stone is projected vertically upwards, to when the string breaks,

(6)

(c) find the magnitude of the acceleration of the stone at the instant just before the string breaks.

(4)

DO NOT WRITE IN THIS AREA DO NOT WRITE IN THIS AREA DO NOT WRITE IN THIS AREA

Question 5 continued

DO NOT WRITE IN THIS AREA
DO NOT WRITE IN THIS AREA
DO NOT WRITE IN THIS AREA

Question 5 continued

DO NOT WRITE IN THIS AREA
DO NOT WRITE IN THIS AREA
DO NOT WRITE IN THIS AREA

Question 5 continued

(Total for Question 5 is 16 marks)

DO NOT WRITE IN THIS AREA
DO NOT WRITE IN THIS AREA
DO NOT WRITE IN THIS AREA

6. A light elastic string, of natural length l and modulus of elasticity $2mg$, has one end attached to a fixed point A and the other end attached to a particle P of mass m. The particle P hangs in equilibrium at the point O.

(a) Show that $AO = \frac{3l}{2}$

(2)

The particle P is pulled down vertically from O to the point B, where $OB = l$, and released from rest.

Air resistance is modelled as being negligible.

Using the model,

(b) prove that P begins to move with simple harmonic motion about O with

period $\pi\sqrt{\frac{2l}{g}}$

(5)

The particle P first comes to instantaneous rest at the point C.

Using the model,

(c) find the length BC in terms of l,

(4)

(d) find, in terms of l and g, the exact time it takes P to move directly from B to C.

(5)

DO NOT WRITE IN THIS AREA
DO NOT WRITE IN THIS AREA
DO NOT WRITE IN THIS AREA

Question 6 continued

DO NOT WRITE IN THIS AREA
DO NOT WRITE IN THIS AREA
DO NOT WRITE IN THIS AREA

Question 6 continued

DO NOT WRITE IN THIS AREA
DO NOT WRITE IN THIS AREA
DO NOT WRITE IN THIS AREA

Question 6 continued

(Total for Question 6 is 16 marks)

DO NOT WRITE IN THIS AREA
DO NOT WRITE IN THIS AREA
DO NOT WRITE IN THIS AREA

7. [*In this question, you may assume that the centre of mass of a circular arc, radius r, with angle at centre 2α, is a distance* $\frac{r\sin\alpha}{\alpha}$ *from the centre.*]

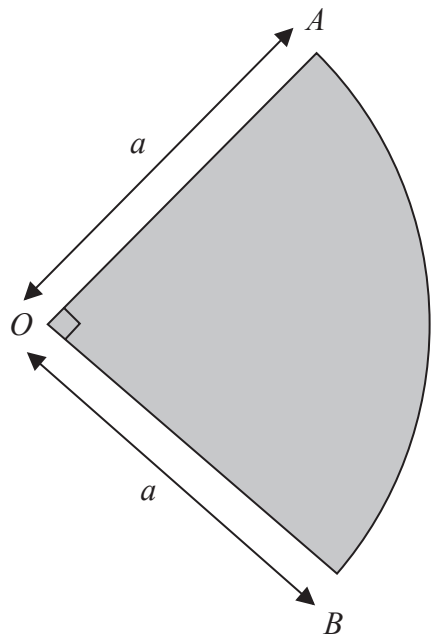

Figure 5

A thin non-uniform metal plate is in the shape of a sector OAB of a circle with centre O and radius a. The angle $AOB = \frac{\pi}{2}$, as shown in Figure 5.

The plate is modelled as a non-uniform lamina.

The mass per unit area of the lamina, at any point P of the lamina, is modelled as $k(OP)^2$, where $k = \frac{4\lambda}{\pi a^4}$ and λ is a constant.

Using the model,

(a) find the mass of the plate in terms of λ,

(5)

(b) find, in terms of a, the distance of the centre of mass of the plate from O.

(4)

DO NOT WRITE IN THIS AREA
DO NOT WRITE IN THIS AREA
DO NOT WRITE IN THIS AREA

DO NOT WRITE IN THIS AREA
DO NOT WRITE IN THIS AREA
DO NOT WRITE IN THIS AREA

Question 7 continued

Question 7 continued

DO NOT WRITE IN THIS AREA
DO NOT WRITE IN THIS AREA
DO NOT WRITE IN THIS AREA

Question 7 continued

DO NOT WRITE IN THIS AREA
DO NOT WRITE IN THIS AREA
DO NOT WRITE IN THIS AREA

Question 7 continued

(Total for Question 7 is 9 marks)

TOTAL FOR PAPER IS 75 MARKS

DO NOT WRITE IN THIS AREA
DO NOT WRITE IN THIS AREA
DO NOT WRITE IN THIS AREA

DO NOT WRITE IN THIS AREA
DO NOT WRITE IN THIS AREA
DO NOT WRITE IN THIS AREA

BLANK PAGE

BLANK PAGE

DO NOT WRITE IN THIS AREA
DO NOT WRITE IN THIS AREA
DO NOT WRITE IN THIS AREA